Wireless LAN / IEEE 802.11

Lecture Mobile Communication

Oliver Waldhorst

Structure

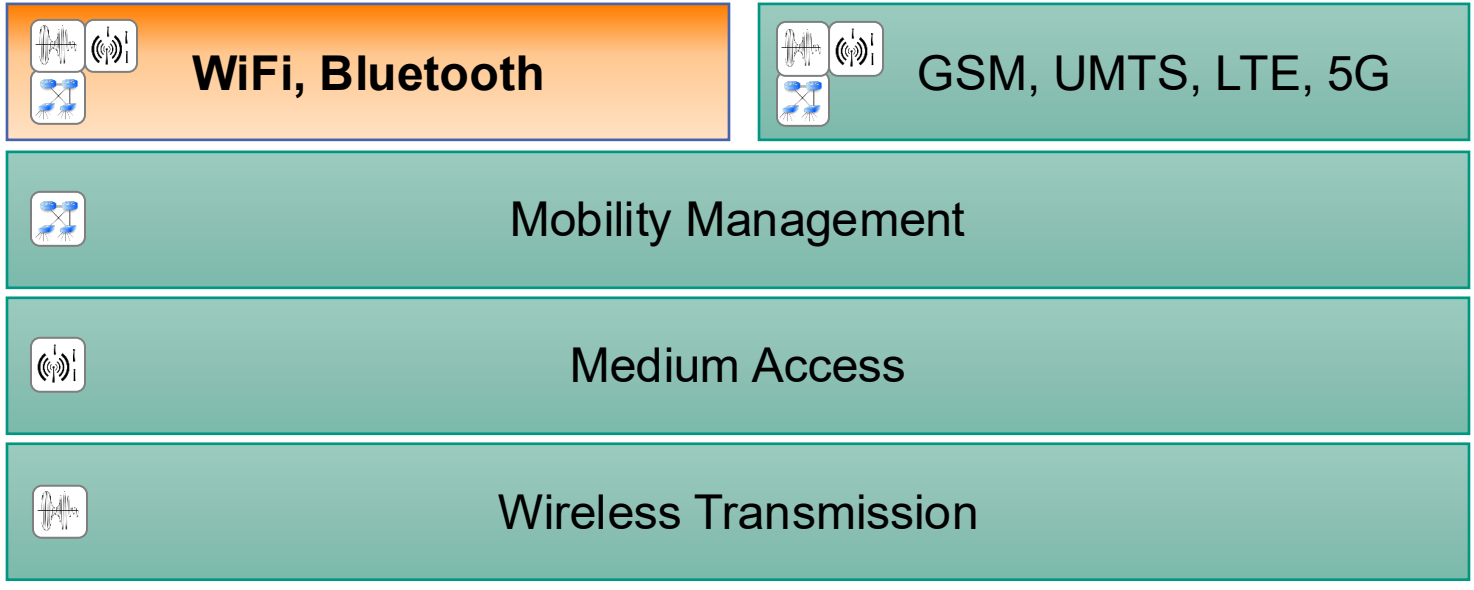
WiFi, Bluetooth
GSM, UMTS, LTE, 5G
Mobility Management
Medium Access
Wireless Transmission

WLAN Introduction

Motivation for Wireless Local Area Networks (WLAN)

- Advantages
  - No wiring problems
    - E.g. historic buildings, fire protection
  - Lower commissioning costs
    - An access point is used by many users
  - Devices can be flexibly placed within a reception area
  - Ad hoc networks can be implemented without prior planning
  - Robustness against damage
    - Disasters such as earthquakes, fires - and careless users
- Disadvantages
  - Lower transmission rates than fixed networks
    - E.g. max. 54 Mbit/s for IEEE 802.11a/g, max. 1733 Mbit/s for IEEE 802.11ac
  - Lower quality of service
    - Transmission error, delay and jitter greater
  - Security
    - Interception of the air interface easily possible

Design Goals for Wireless Local Networks

- Worldwide operation
  - …without special permits or licenses
- Robust transmission technology
  - Interference from other technologies
- Protection of investments already made in the fixed-network sector
  - Interoperability between LANs and WLANs
  - Transparency for higher layers
- Easy to use and manage
  - Automatic configuration (plug and play) without a system administrator and without manual intervention
  - Simplification of (spontaneous) collaboration at meetings
- Low power consumption due to battery operation
- Security
  - Interception of confidential data
  - Emissions (e.g. no interference with pacemakers)

Examples of WLAN solutions

- IEEE 802.11
  - Basic standard was adopted on 26.07.1997
  - Extensions of the physical layer (PHY layer)
  - E.g.,802.11a/b/g/n/a*
  - Media Access Layer (MAC) Layer Extensions
  - E.g. 802.11h/e/i
  - High relevance (→ discussed in this chapter)
- HIPERLAN – High Performance Radio Local Area Network
  - European Standard
  - Version 1: 23.529 Mbps in the 5 GHz band
  - Version 2: 54 Mbit/s in the 5 GHz band
  - No products available currently

Example: KA-WLAN

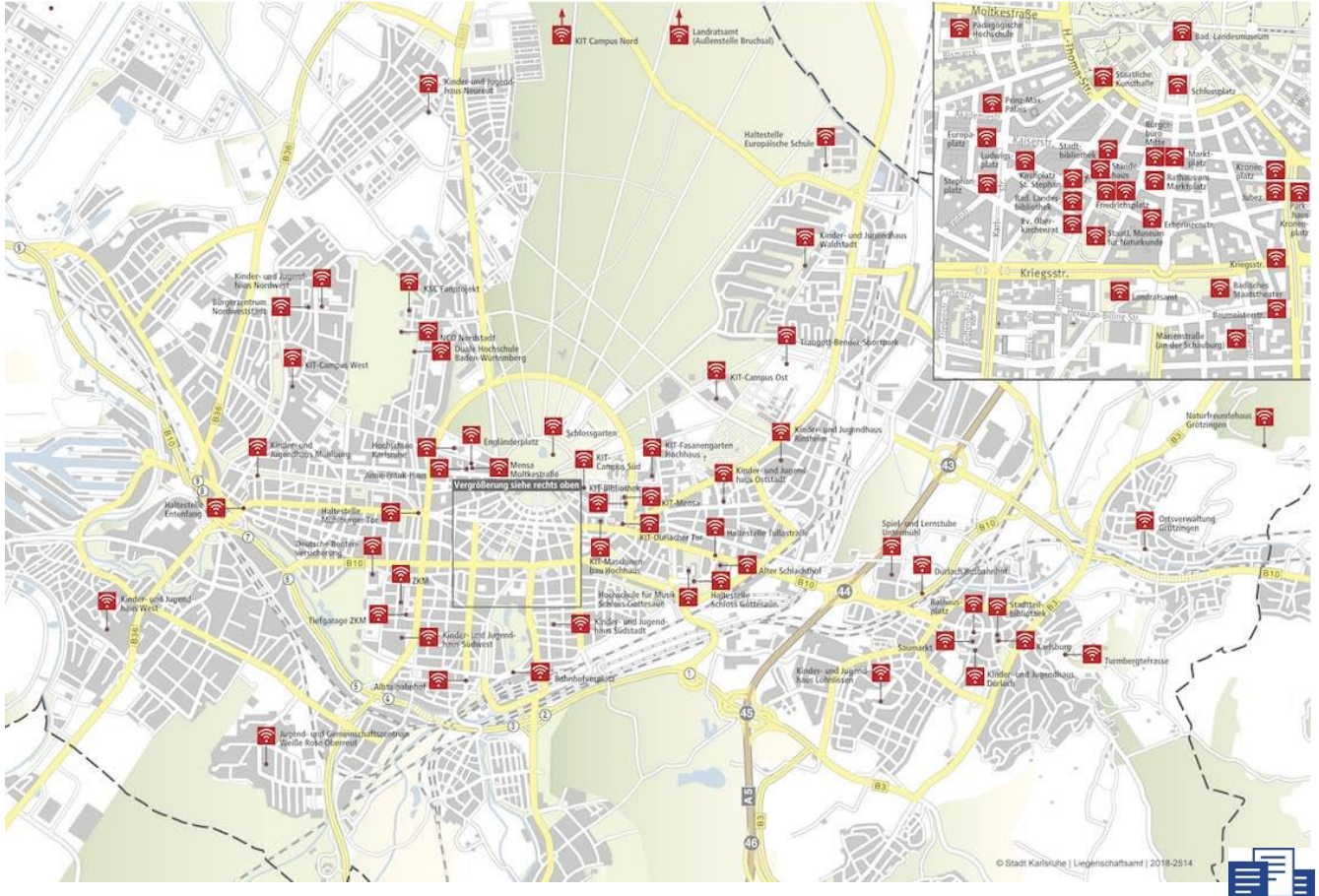

[5.6]

Forms of wireless LANs

- Infrastructure Networks
  - Devices are wirelessly connected to the wired infrastructure via an access point (AP)

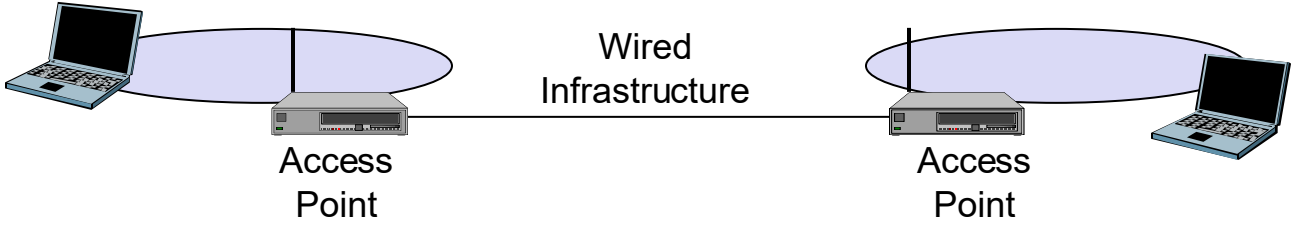

- Ad hoc networks
  - Devices communicate directly with each other <u>without wired infrastructure</u>

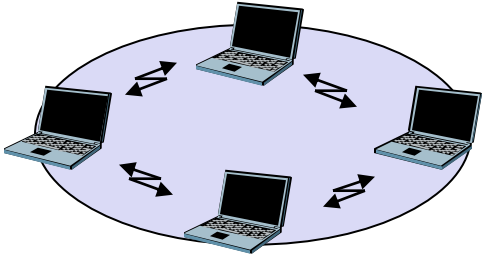

Architecture of an infrastructure network

- Station (STA)
  - End devices with access function to the wireless medium and radio contact to the access point (AP)
- Basic Service Set (BSS)
  - Group of stations + AP communicating with each other on the same channel (radio frequency)
- Access Point (AP)
  - Station that participates in both a BSS and the distribution system.
- Portal
  - Transition to another network
- Distribution System (DS)
  - Connecting multiple BSS to an Extended Service Set (ESS)
  - Architecture of the distribution system is not part of the standard (usually switch, router, ...)

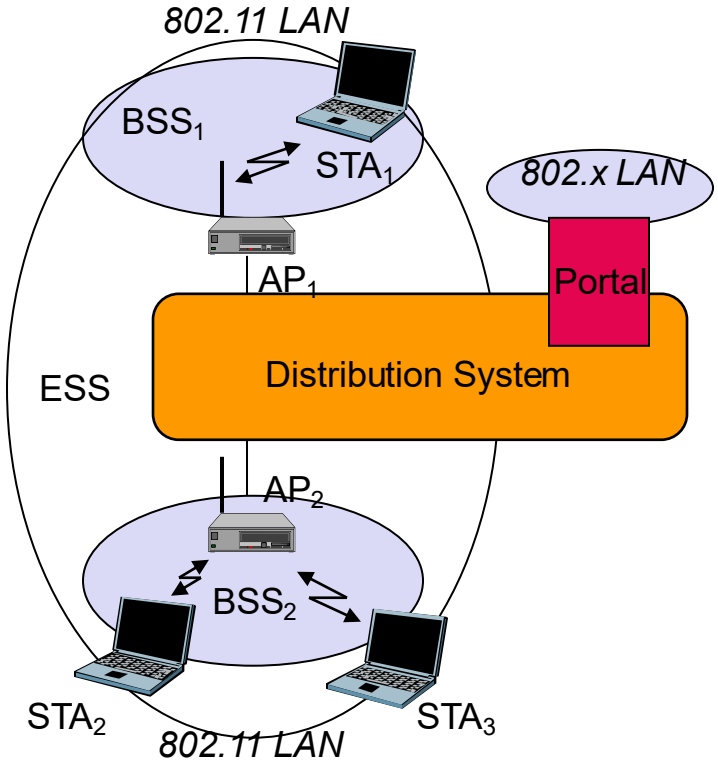

Architecture of an ad-hoc network

- Direct communication between devices
  - Limited range
- Station (STA)
  - Device with access function to the wireless medium
- Independent Basic Service Set (IBSS)
  - Group of stations that communicate with each other on the same channel (radio frequency)
- Formation of multiple IBSSs
  - Use of different channels (radio frequencies)
  - Room multiplexing (sufficient distance)
  - DSSS

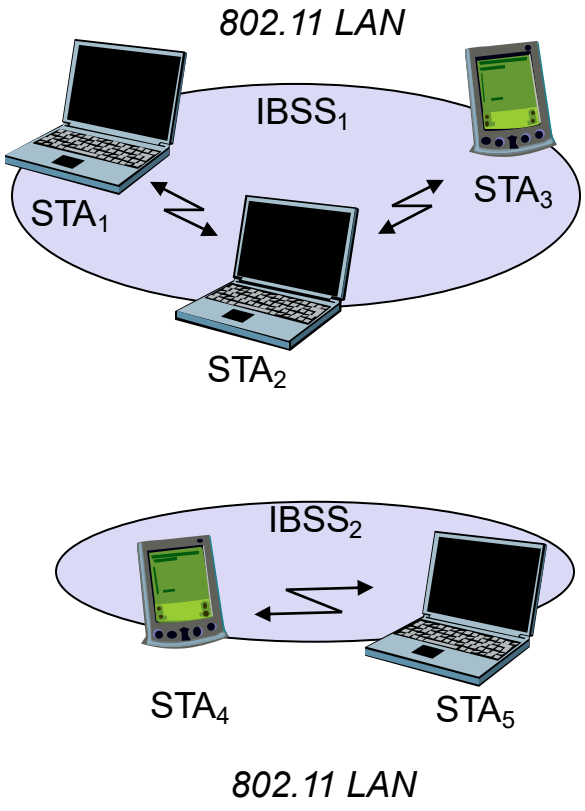

Protocol stack

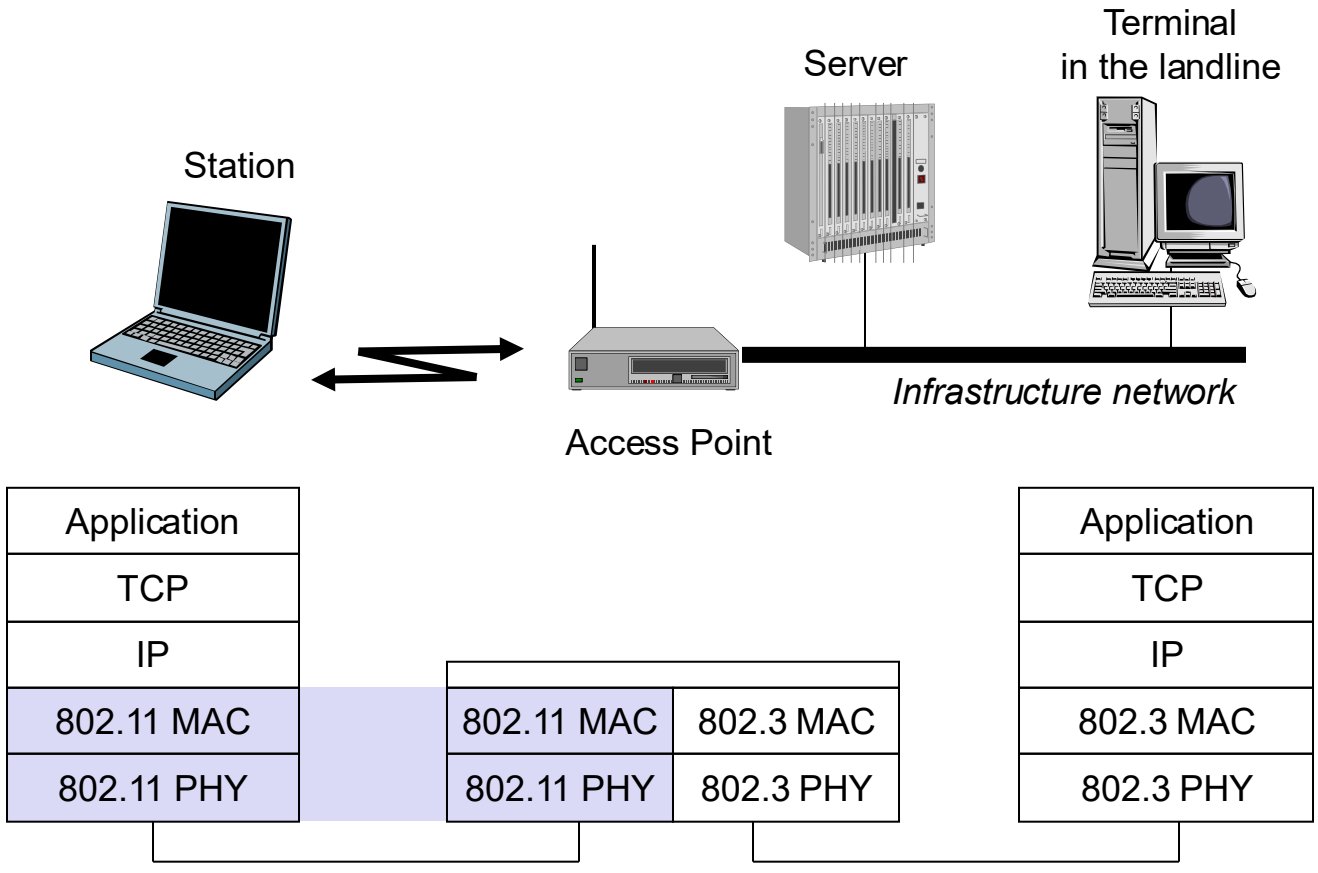

Layers and functions

- MAC
  - Media access
  - Fragmentation
  - Encryption
- MAC-Management
  - Synchronization
  - Scanning
  - Association/Re-association
  - Power-Management
  - Authentication/ Encryption
- PLCP
  - Unified PHY access point independent of transmission technology
  - Clear Channel Assessment Signal
  - Signal Threshold for Carrier Sense
- PMD
  - Modulation
  - Encoding
- PHY Management
  - Channel Selection
- Station Management
  - Coordination of management functions

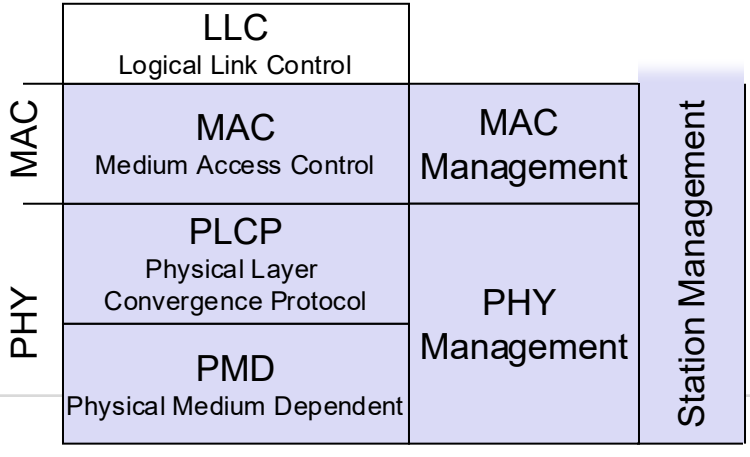

The PHY Layer

PHY layer

- Basic standard defines 3 variants:
  - Direct Sequence Spread Spectrum (DSSS)
    - Data rates of 1 – 2 Mbit/s
    - Prevalence
    - Still included in 802.11b/g components today
  - Frequency Hopping Spread Spectrum (FHSS)
    - Data rates of 1 – 2 Mbit/s
    - No WiFi components available that use FHSS
      - But: Bluetooth uses FHSS
    - … not considered in the following
  - Infrared
    - Data rates of 1 – 2 Mbit/s
    - No WiFi components available that use infrared
      - But: IrDA uses infrared
    - … not considered in the following

DSSS in IEEE 802.11

[5.11]

- Use of the 11-chip Barker code for the spread in the base standard
  - At a data rate of 1 or 2 Mbit/s
    - For higher data rates, other codes are used, see below.
  - Code: +1, -1, +1, +1, -1, +1, +1, +1, -1, -1, -1
    - Convention: +1 represents logical 0, -1 represents logical 1 --> Code: 01001000111
    - Length of chipping sequence is 11
  - Constant symbol rate of 1 MSymbol/s
    - Note: In 802.11, symbol describes the waveform(s) for transferring a group of chips!
      - 11 chips or 22 chips / 1 or 2 data bits
    - Symbol rate as defined in Chapter 2 is in 802.11 Modulation Rate
      - Always 11 MBd!
- Modulation methods used
  - Differential Binary Phase Shift Keying (DBPSK)
    - 11 chips/symbol → 1 bit/symbol → Data rate: 1 Mbit/s
  - Differential Quadrature Phase Shift Keying (DQPSK)
    - 22 chips/symbol □ 2 bits/symbol □ Data rate: 2 Mbit/s

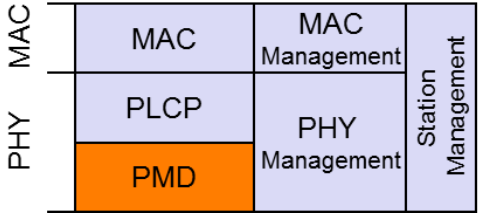

Format of a DSSS Data Unit

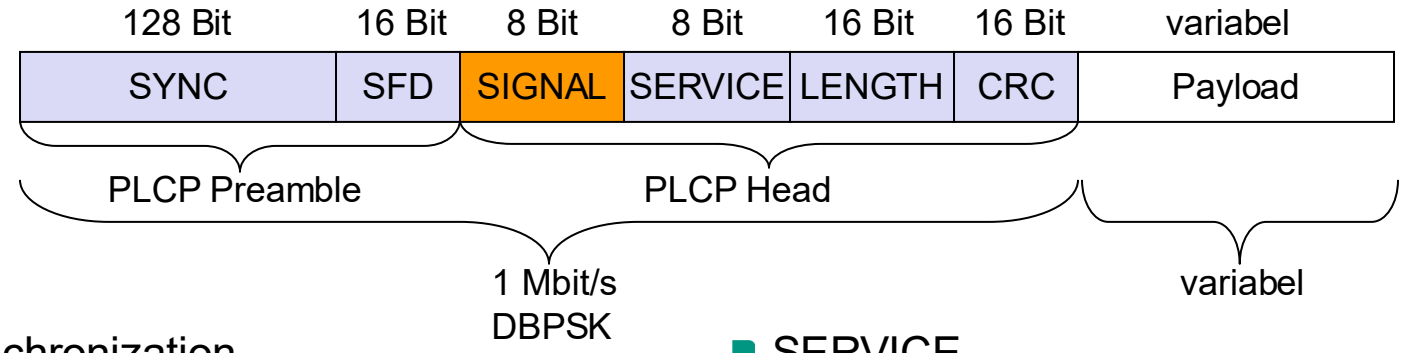

- SYNC: Synchronization
  - Synchronization via the bit sequence 101010....
- SFD: Start Frame Delimiter
  - Bit sequence 1111001110100000 denotes the end of the preamble and the beginning of the PLCP header
- SIGNAL
  - Data rate at which payload data is transmitted
  - Facilitates backward compatibility
- SERVICE
  - Reserved (e.g. used by IEEE 802.11b/g)
  - 0x00 displays 802.11 frames
- LENGTH
  - Time [ms] needed to transfer the payload data
- CRC
  - Checksum via PLCP head
  - Test polynomial: ITU-T-CRC-16

DSSS Channel Splitting

- WLAN uses the (license-free) Industrial, Scientific, Medical (ISM) Band
  - Subdivision into 13 channels in the range 2.4000 – 2.4835 GHz
    - Width of a channel: 22 MHz
  - Max. 3 non-overlapping channels can be realized
- Channel layout:

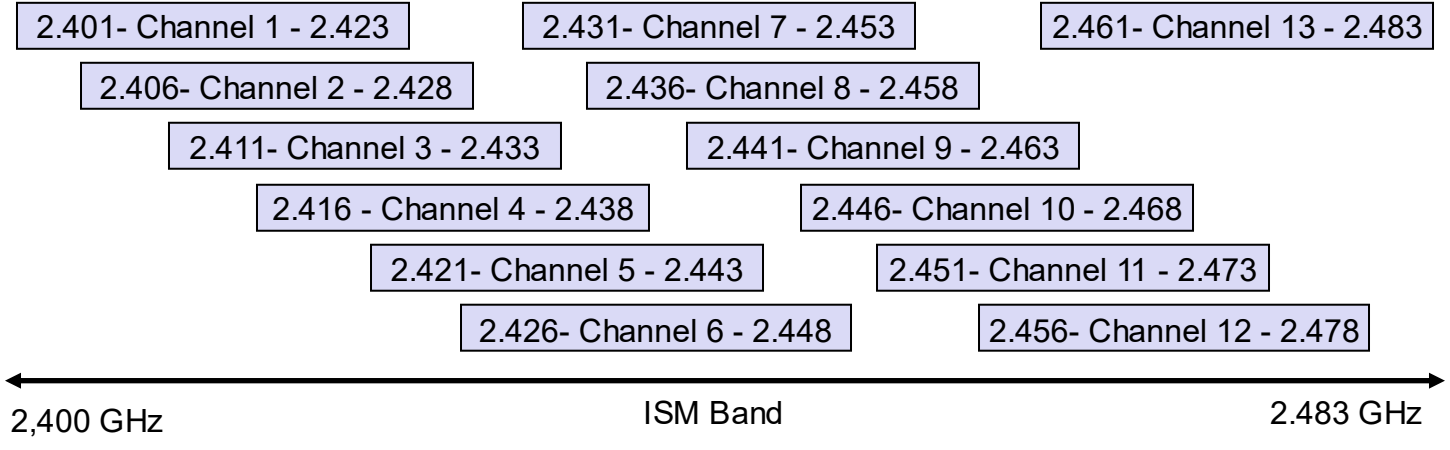

Extensions (1)

- IEEE 802.11b (see below)
  - Data rates of 5.5 and 11 Mbps in the 2.4 GHz band
  - Backwards compatible with the basic standard
  - Uses Complementary Code Keying (CCK)
  - Definition of a format for short data units
- IEEE 802.11g
  - Data rates of 6 - 54 Mbps in the 2.4 GHz band with OFDM (Extended Rate PHY, ERP)
  - Backward compatible with 802.11 and 802.11b (Non-Extended Rate PHY, nonERP)
- IEEE 802.11a
  - Data rates of 6 - 54 Mbps in the 5 GHz frequency range with OFDM
  - Transmit Power Control (IEEE 802.11h): Automatic adjustment of transmit power in the 5 GHz band
  - Dynamic Frequency Selection (IEEE 802.11h): Automatic channel change in the 5 GHz band

Extensions (2)

- IEEE 802.11n (WiFi 4)
  - Maximum gross data rates of up to 600 Mbps in the 2.4 GHz and 5 GHz frequency range
  - Use of Multiple Input Multiple Output (MIMO) with OFDM
    - Maximum of 150 Mbit/s (gross) per parallel data path
    - For higher data rates: Bundling of several (up to four) data paths
  - Compatible with 802.11b and 802.11g networks, coexistence with existing 802.11a networks
    - Compatibility mode can be disabled in some implementations ("greenfield" mode)

- 802.11ac (WiFi 5)
  - Wider channels (80 MHz or 160 MHz instead of 40Mhz) in the 5 GHz band
  - More parallel MIMO data streams (up to 8 instead of 4)
  - Multi-user MIMO (data streams to different devices, SDMA) in the downlink
  - Improved modulation (up to 256-QAM)
  - Multi-station throughput > 1 Gbps

- 802.11ax (WiFi 6)
  - Uses all ISM bands from 1 GHz to 5 GHz, WiFi 6E additional 6 GHz
  - OFDMA: Temporal division of frequencies into resource units, central coordination by AP
  - Improved modulation (up to 1024-QAM)
  - Multi-user MIMO in uplink and downlink
  - Improved coexistence between neighboring grids

Extensions (3)

- 802.11af
  - Allows operation in the TV white space spectrum (54MHz – 70MHz) based on 802.11ac
  - Narrower OFDM channels, therefore data rates up to 568.9 Mbit/s

- 802.11ah
  - Operation in frequency bands below 1GHz, therefore longer ranges, but few available frequencies
  - Many areas of application, e.g. large sensor networks, hotspots with a long range, relieving mobile networks of data traffic

- 802.11be (WiFi 7)
  - Latest WiFi standard, finalized in 2024, also called Extremely High Throughput (EHT)
  - Operates in 2.4 GHz, 5 GHz, and 6 GHz bands; supports channel widths up to 320 MHz for ultra-fast speeds (up to 23–46 Gbit/s theoretical)
  - Introduces Multi-Link Operation (MLO): simultaneous use of multiple frequency bands for higher reliability and lower latency
  - Uses advanced modulation (4096-QAM) and improved OFDMA/MIMO for better efficiency and capacity

Example: IEEE 802.11b

- 8-bit Complementary Code replaces 11-chip Barker Code (Complementary Code Keying – CCK)
  - Modulation rate remains at 11 MBd
  - New symbol rate = 1 MSymbol/s * 11 / 8 = 1.375 MSymbol/s
  - Chipping sequence is determined by (part of) payload data
    - i.e. user data is transmitted at the same time through the spread code used
- Implementation of higher data rates
  - 4 bits per symbol --> Data rate = 1.375 MSymbol/s * 4 bits/symbol = 5.5 Mbps
    - 2 bits are modulated via DQPSK
    - 2 bits select one of 4 complex codes
  - 8 bits per symbol --> Data rate = 1.375 MSymbol/s * 8 bits/symbol = 11 Mbps
    - 2 bits are modulated via DQPSK
    - 6 bits select one of 64 complex codes
- Since the receiver knows all 4 or 64 codes, it can find out the code used and thus decode the payload data

Example: IEEE 802.11a

- Data rates from 6 to 54 Mbps in the 5 GHz band
  - How to use OFDM
  - Forward error correction (FEC) to correct errors that occur
    - FEC Rate = n/m: For n data bits, m encoded bits must be sent

Modulation	FEC Rate	Data rate
BPSK	1 / 2	6 Mbps (*)
BPSK	3 / 4	9 Mbps
QPSK	1 / 2	12 Mbps (*)
QPSK	3 / 4	18 Mbps
16-QAM	1 / 2	24 Mbps (*)
16-QAM	3 / 4	36 Mbps
64-QAM	2 / 3	48 Mbps
64-QAM	3 / 4	54 Mbps

(*) mandatory

The MAC Layer

Media access (MAC) in the link layer

- Special requirements for WLANs
  - Media access
    - In wireless LANs, there is the problem of hidden end devices
      → WLANs require special media access procedure
  - Impact of wireless transmission medium
    - Wireless LANs are more susceptible to interference than wired ones
      - Higher bit error rate of the radio medium
      - Frequency range may be used by other technologies
      → Automatic Repeat Request (ARQ) procedure at MAC layer is reasonable
      → Fragmentation at the MAC layer is reasonable
    - Wireless LANs are much easier to overhear than wired ones
      → MAC-layer security mechanisms required
  - Mobile Device Support
    - Low battery capacity
    - Constant listening to the radio medium would require too much energy
    → Power management mechanisms at the MAC layer required

Medium Access in IEEE 802.11

- Distributed Coordination Function (DCF)
  - Decentralized approach
  - Can be used in infrastructure and ad-hoc networks
  - In the Contention Period (CP), stations compete for media access
    - Data exchange on a best-effort basis
    - Broadcast and multicast possible
  - Every IEEE 802.11 station <u>must</u> support DCF

- Point Coordination Function (PCF)
  - Centralized approach
  - Can only be used in infrastructure networks
  - Point Coordinator controls media access during the Contention Free Period (CFP)
    - Media access can be guaranteed station for certain period of time
  - PCF does not have to be implemented by every station
    - Current products usually do not support PCF

Distributed Coordination Function (1)

- Carrier Sense Multiple Access/Collision Detection (CSMA/CD) method known from IEEE 802.3 cannot be used
  - Collision detection takes place at the transmitter with CSMA/CD
    - Station must be able to transmit and receive simultaneously
    - Separate transmitter and receiver unit for WLAN
  - Collision detection must take place at the receiver with WLAN
    - See situation with hidden devices

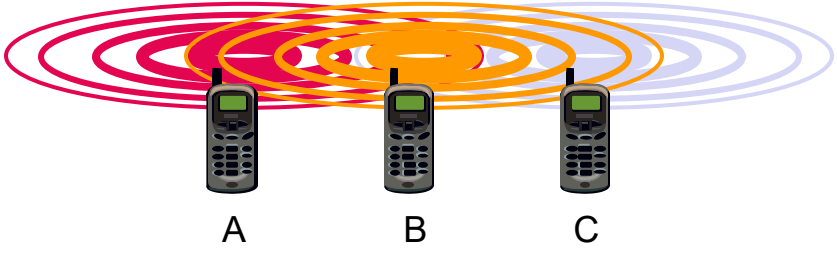

- IEEE 802.11 uses the Carrier Sense Multiple Access/Collision Avoidance (CSMA/CA) method
  - Probability of collision is minimized

Distributed Coordination Function (2)

- Physical Carrier Sense Function
  - Scan if the medium is currently busy by another station

- Virtual Carrier Sense Function
  - Medium reservation based on Network Allocation Vector (NAV)
    - Estimation of medium occupancy maintained by each station
  - Each MAC data unit includes as a Duration/ID field;
    - Represents estimated duration of medium occupancy in microseconds (µs)
  - Algorithm: Stations store/update their NAV value whenever
    - Valid MAC frame received that is not addressed to this station and
    - Duration/ID field is larger than the station's current NAV

Distributed Coordination Function (3)

- Different waiting times (Inter Frame Spaces, IFS) when medium is free or NAV is expired
  - Short Interframe Space (SIFS)
    - Highest priority → shortest waiting time
    - E.g., 10µs for 802.11 with DSSS and 802.11g nonERP; 16µs for 802.11a and 802.11g ERP
  - Distributed (Coordination Function) Interframe Space (DIFS)
    - Lowest priority → longer waiting time ($DIFS = SIFS + 2 * slot_time$)
    - E.g., 50µs for 802.11 with DSSS and 802.11g nonERP; 34µs for 802.11a and 802.11g ERP

Distributed Coordination Function (4)

- Backoff-Algorithm: Choose random $backoff_time = random(CW) \times slot_time$
  - CW defines Contention Window:
    - $random(CW) \in \{0, 1, \ldots, CW\}$ is uniformly distributed random number
    - $CW_{min} \leq CW \leq CW_{max}$,
    - CW, CW_{min} and CW_{max} have the form $2^n - 1$ for a natural number n
      - E.g., $CW_{min} = 31$ for 802.11 mit DSSS and 802.11g nonERP; $CW_{min} = 15$ for 802.11a and 802.11g ERP; $CW_{max} = 1023$ for all standards
  - 1st transmission attempt: $CW = CW_{min}$
  - On transmission failure: increase CW until a maximum of CW_{max} is reached
    - E.g., for 802.11 with DSSS:
      - Attempt $i \leq 6$: $CW = 2^{i+4} - 1$, i.e., $CW = CW_{min} = 31$ at minimum and $CW = CW_{max} = 1023$ at maximum
      - For $i > 6$ no further increase, i.e., $CW = CW_{max} = 1023$
  - On success: reset CW to CW_{min}
  - $slot_time$ is duration of a time slot
    - E.g., 20µs for 802.11 with DSSS and 802.11g nonERP; 9µs for 802.11a and 802.11g ERP

Distributed Coordination Function (4)

- Procedure

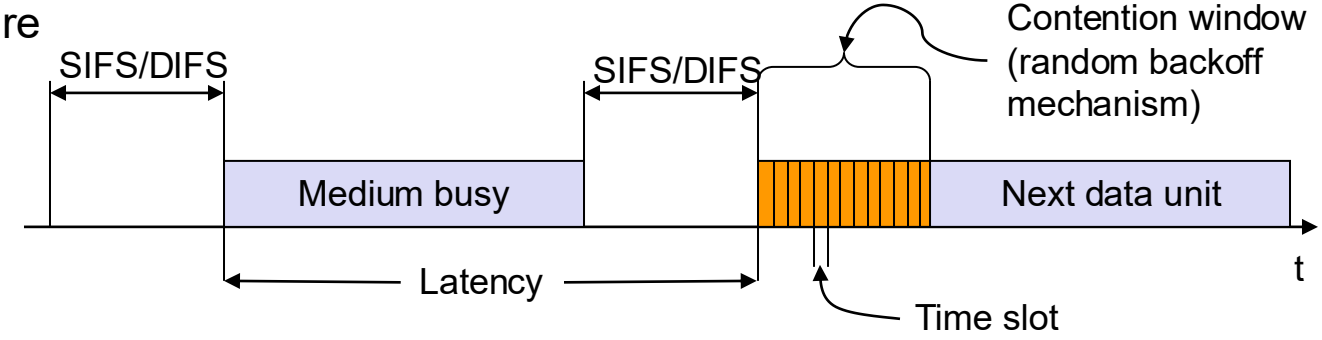

- Station willing to send senses the medium (physically or virtually)
- Case 1: Medium is free for duration of an applicable IFS
  - Data will be sent
- Case 2: Medium is busy
  - Wait until medium is free for the duration of the applicable IFS
  - In addition, sending data is delayed by random backoff time $random(CW) \times slot_time$
  - If medium is busy due to another station during backoff time, backoff timer is paused

Stages in the competition

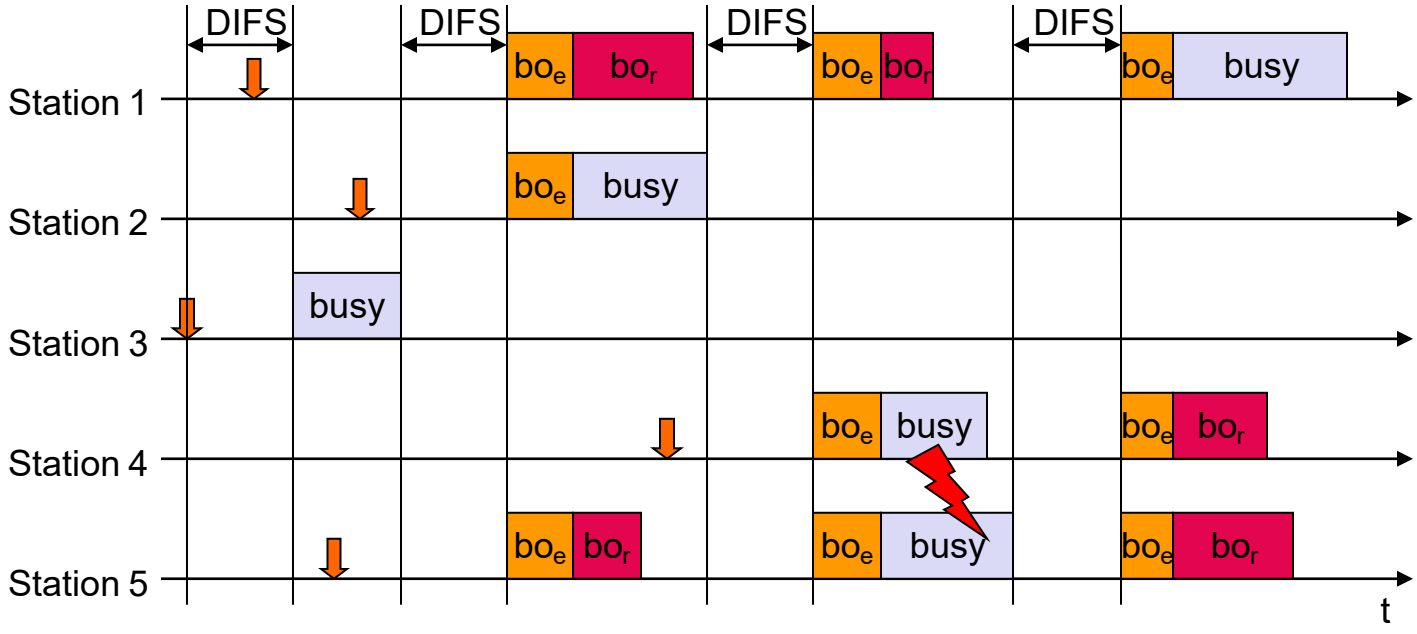

busy — Medium occupied

Transmission request (Packet from higher layer received)

bo_e — expired backoff time

bo_r — remaining backoff time

Sending Unicast Data Units

- Data can be sent after waiting for DIFS
- Receivers respond after SIFS with an ACK if data unit was received correctly
  - Frame is validated by CRC checksum
- On transmission failure, data unit is automatically repeated by the transmitter
  - Station competes again for the medium
  - New backoff is calculated (CW_{min} and CW_{max} adjusted)

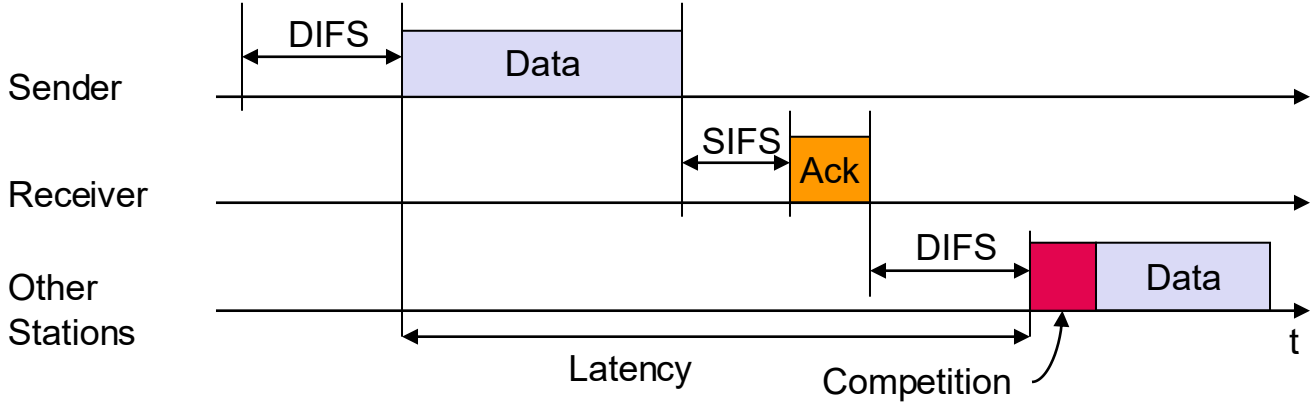

RTS/CTS Extension

- RTS/CTS extension for unicast data units
  - RTS can be sent after waiting for DIFS
    - Estimated duration of occupancy send in duration field
  - Confirmation by CTS after SIFS by recipient
    - Also includes occupancy in duration field
  - Immediate sending of data after SIFS
    - Confirmation as usual with ACK
  - Other stations store occupancy times in the NAV
    - Virtual reservation

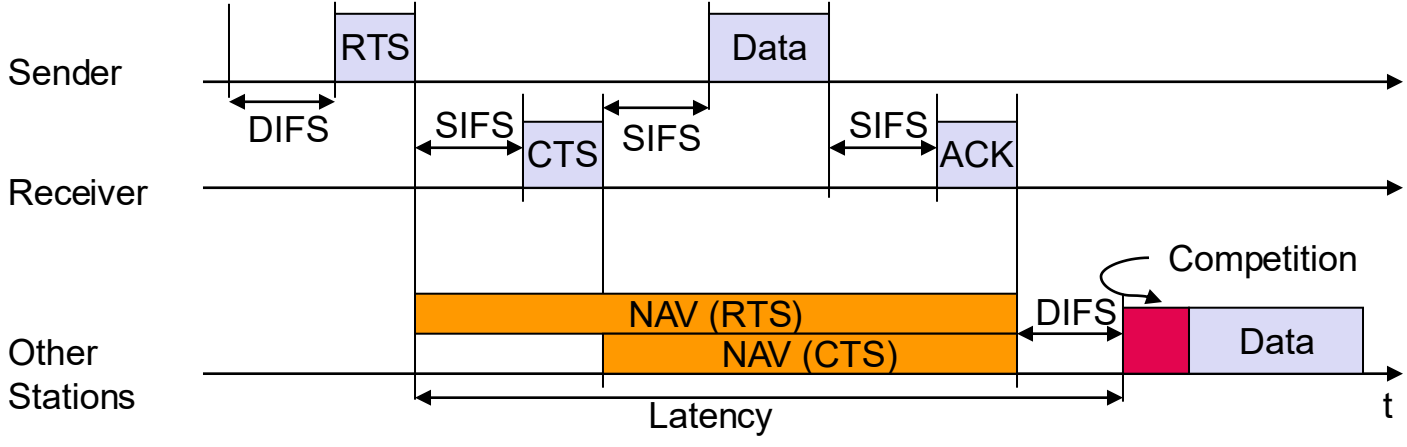

Exercise: DCF Contention Algorithm

- In the scenario below, three WLAN stations are within mutual transmission range. Station A is sending the last packet of an ongoing transmission. Meanwhile, stations B and C both want to send to receiver A.
  What is the sequence of events if collision avoidance using RTS and CTS as well as acknowledgment with an ACK is applied?

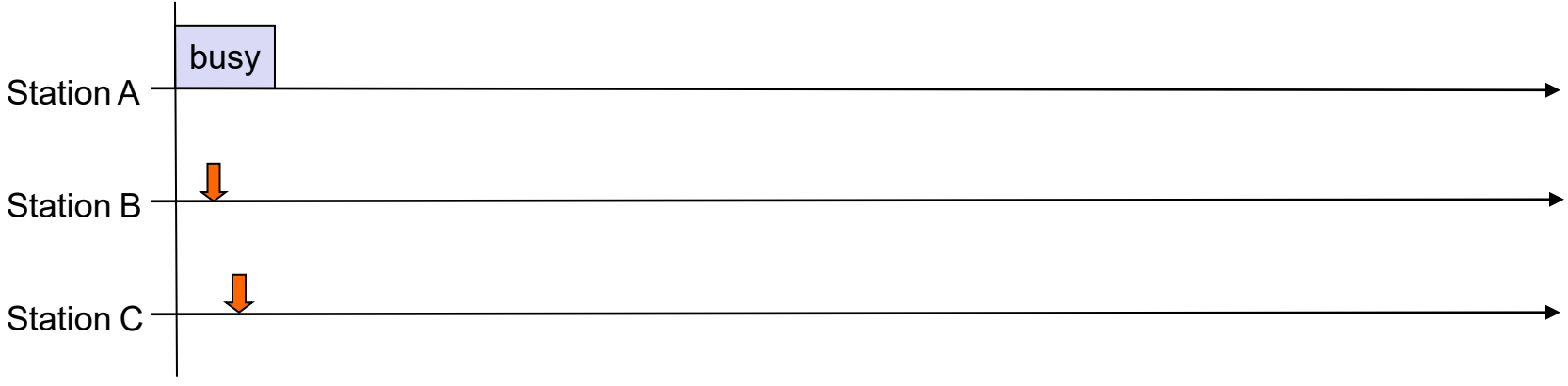

Exercise: DCF & Hidden Terminals

- How does the sequence from the previous task change if stations B and C are within the transmission range of A, but are otherwise hidden terminals to each other?

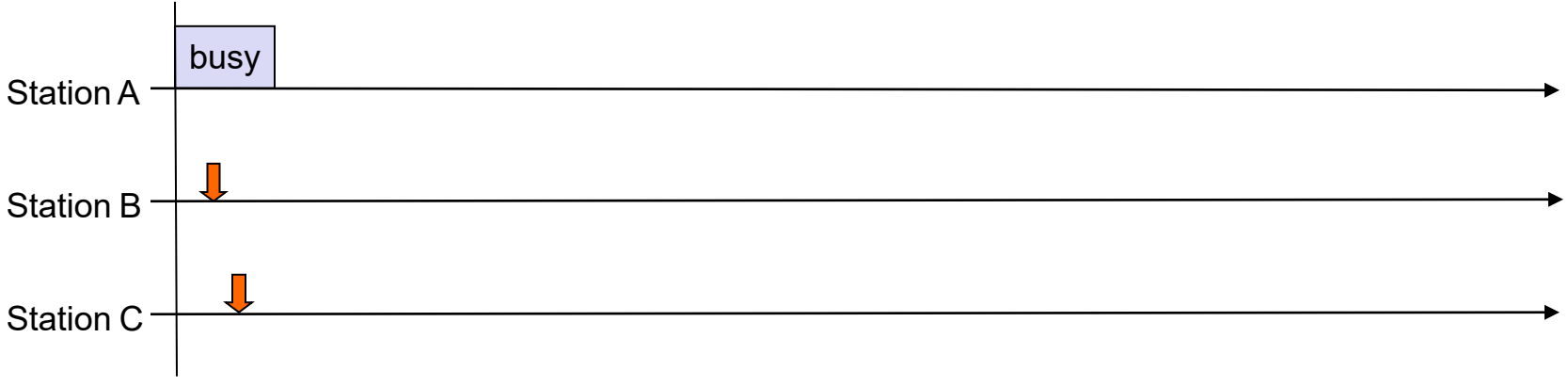

Exercise: Collisions despite RTS/CTS

- What are the probabilities for the different cases from the previous task if an RTS message is structured as shown below and transmitted at a data rate of $1Mbit/s$? Here, $SIFS = 10\mu s$ and $SLOT_TIME = 20\mu s$.

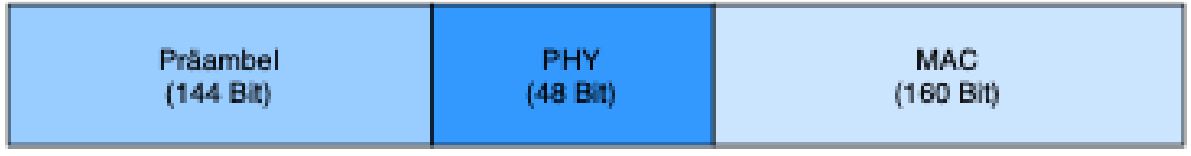

Fragmentation

- Goal
  - Transfer of longer contiguous data
  - Size of fragments limited by threshold value 256 ≤ *FRAG_THRESHOLD* ≤ 2346,
  - Maximum data amount limited by MAC Service Data Unit (MSDU)
    - Specified by LLC layer, typically 2304 bytes
- Procedure
  - Controlled by sequence numbers and fragment numbers
  - Stop-and-Wait ARQ Procedure Applied to Fragments
  - Why is the NAV value not set over the transmission of the entire data?

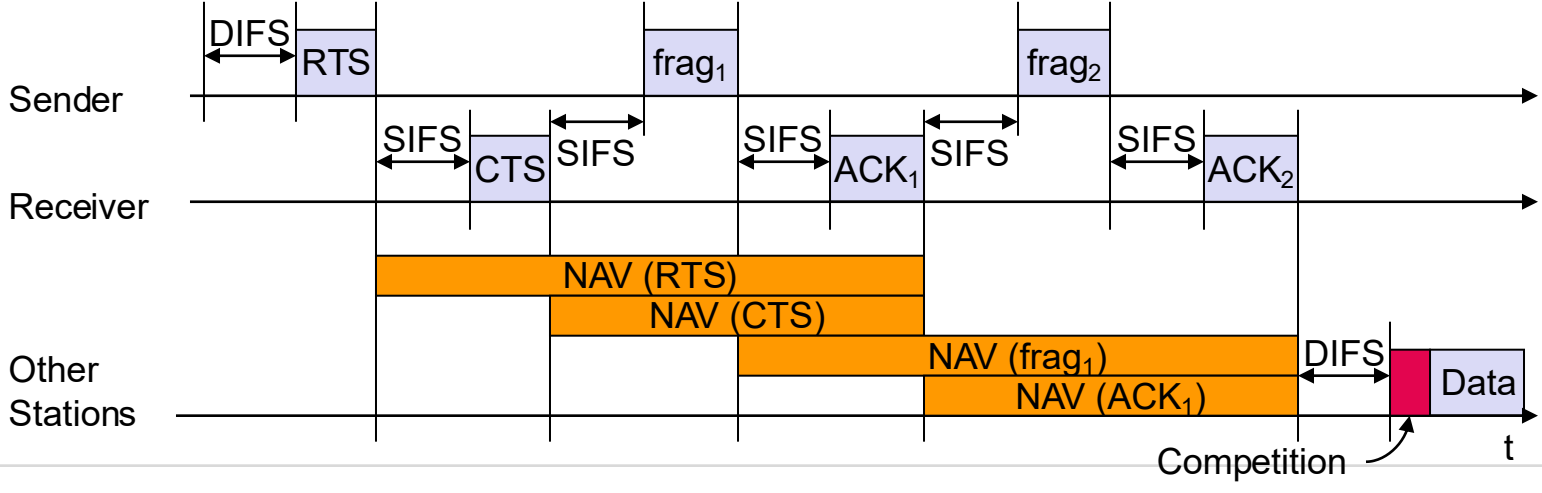

Point Coordination Function (1)

- Media access is centrally controlled by Point Coordinator
- PCF is optional, i.e. not every station has to support PCF, so a distinction is made between 2 phases
  - Contention Period (CP) – Use of DCF for media access
    - Even stations that do not support PCF can communicate
  - Contention Free Period (CFP) – Using PCF for media access
    - Central control enables implementation of time-critical services
- CFP-Interval = CFP + CP
  - Multiple of Beacon Interval
- Periodic beacons of the access point set NAV value for stations that do not support PCF

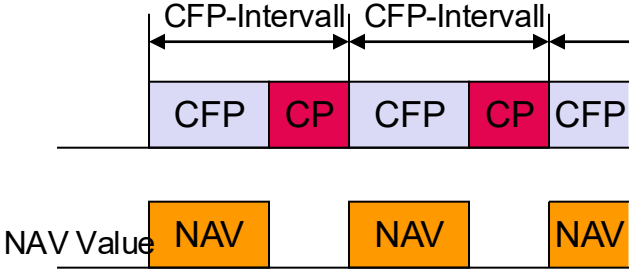

Point Coordination Function (2)

- Poll-List
  - Access point maintains a poll list
    - Includes all PCF-enabled stations
    - PCF capability is determined by the Stations announced
- Special waiting time
  - Point (Coordination Function) Interframe Space (PIFS)
    - Medium Priority
    - Calculation:

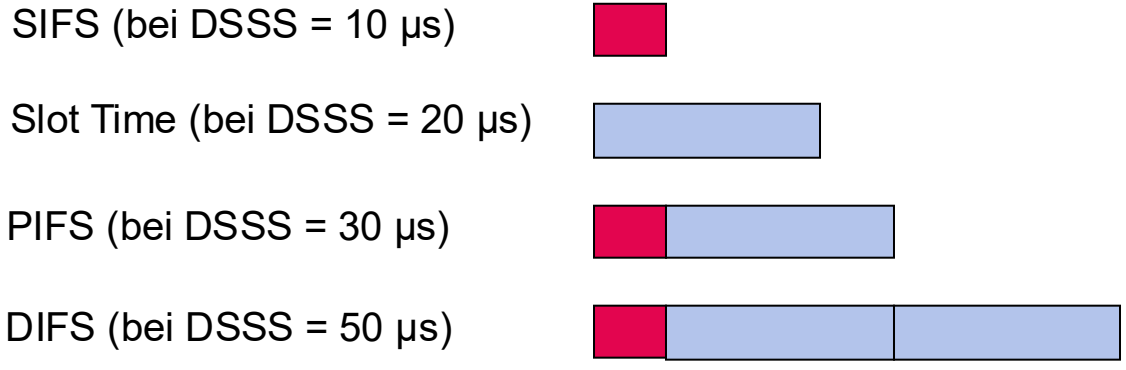

Example: Point Coordination Function (1)

- Station A communicates with Station B via access point
  - Polling by Access Point

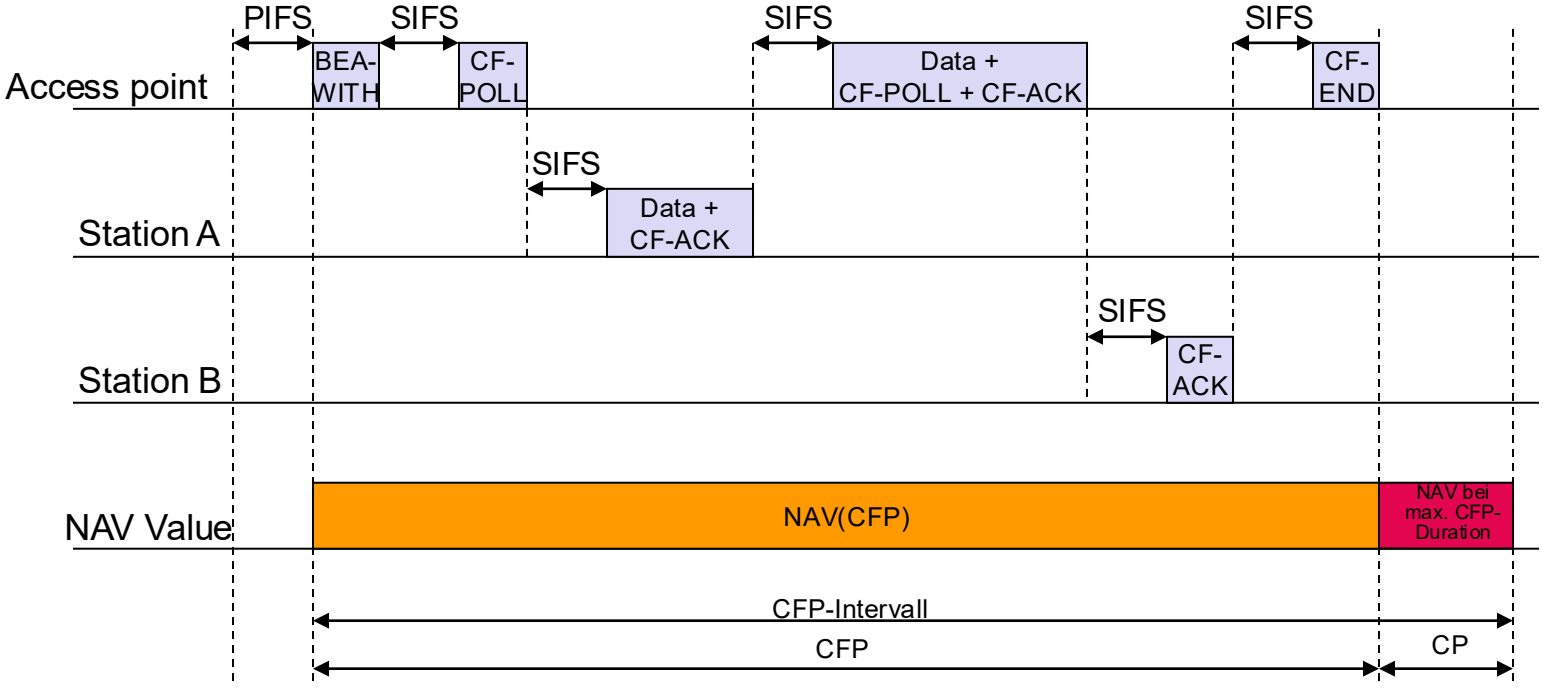

Example: Point Coordination Function (2)

- Station A communicates directly with Station B
  - Advantage: Less stress on the medium

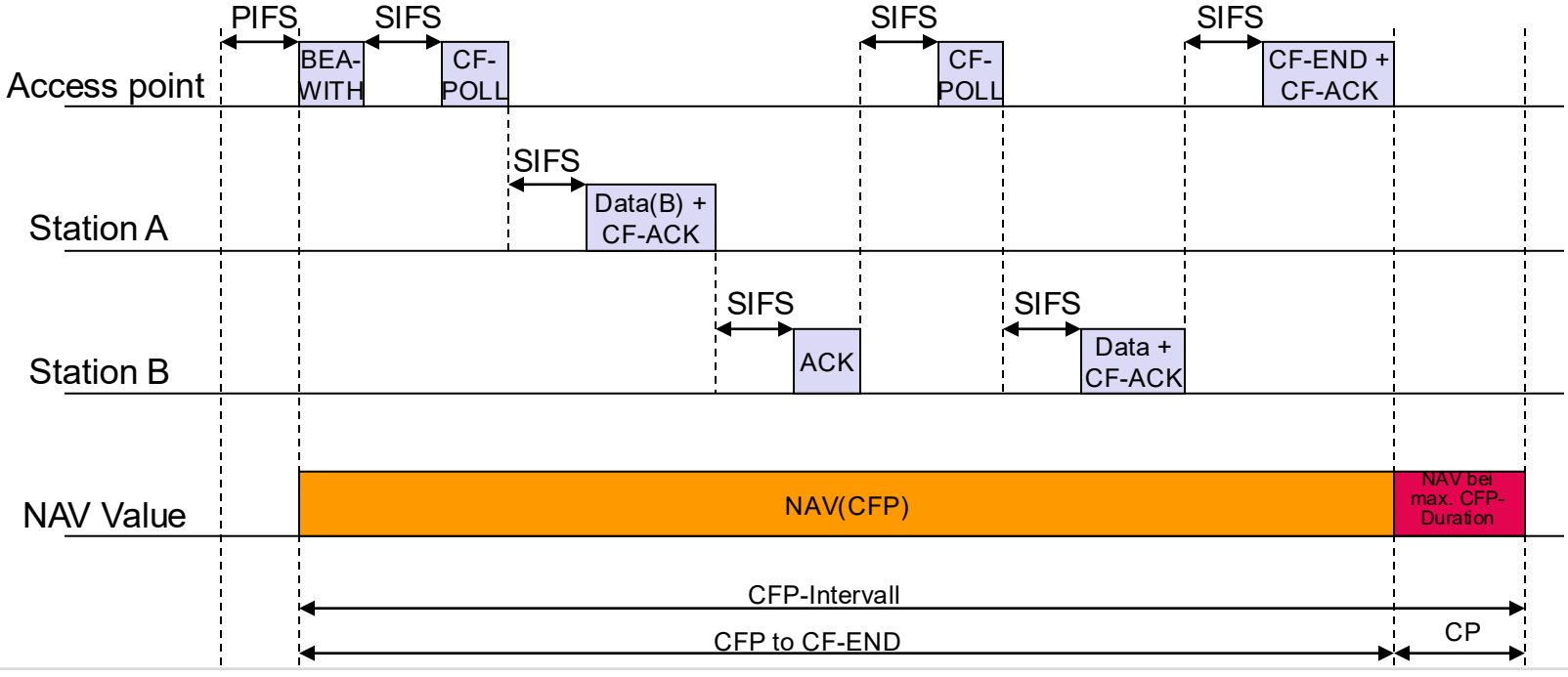

MAC-Management

MAC Management

- Compared to wired LANs such as IEEE 802.3, a number of additional issues need to be solved. For example:
  - How does a station find a WLAN?
  - How does a station become a member of a WLAN?
  - How can energy be saved by "sleeping"?
  - How can wireless communication be secured?

→ Tasks of MAC Management

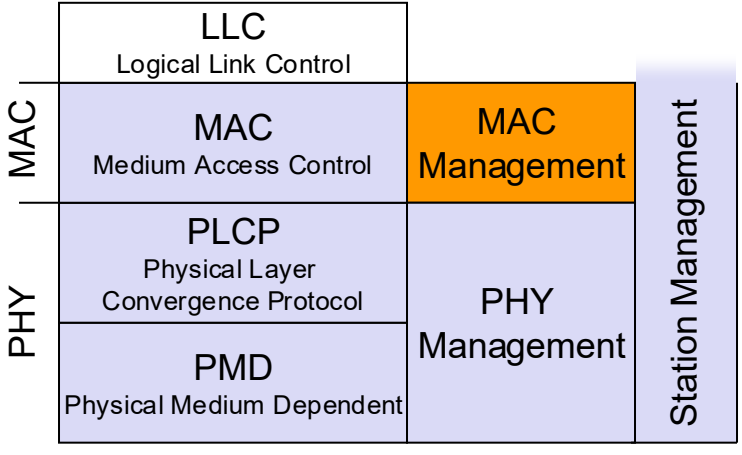

Time synchronization

- Problem
  - Some tasks require the stations and access points to have a synchronized timer, for example:
    - Synchronization of the jump sequence in FHSS
    - Power-Management
    - Coordination of the PCF
- Timer Synchronization Function (TSF)
  - Stations and access points have a timer
    - 64 Bit
    - 1 MHz
    - Accuracy: 25 ppm (parts per million)
  - Synchronization of the timers with each other
    - Different approaches for infrastructure network (BSS) and ad-hoc network (IBSS)

Time synchronization in infrastructure networks

- Central approach
  - Access point sends beacons at regular intervals
    - Broadcast Data Unit
    - Includes current timer value of the access point
  - Target Beacon Transmission Time (TBTT)
    - Start time to send out a beacon
  - Doesn't handle media access differently than other data entities
    - Beacon can be delayed
    - Timer value in the beacon needs to be adjusted – represents real airtime
  - Stations update their timer based on the information in the beacon

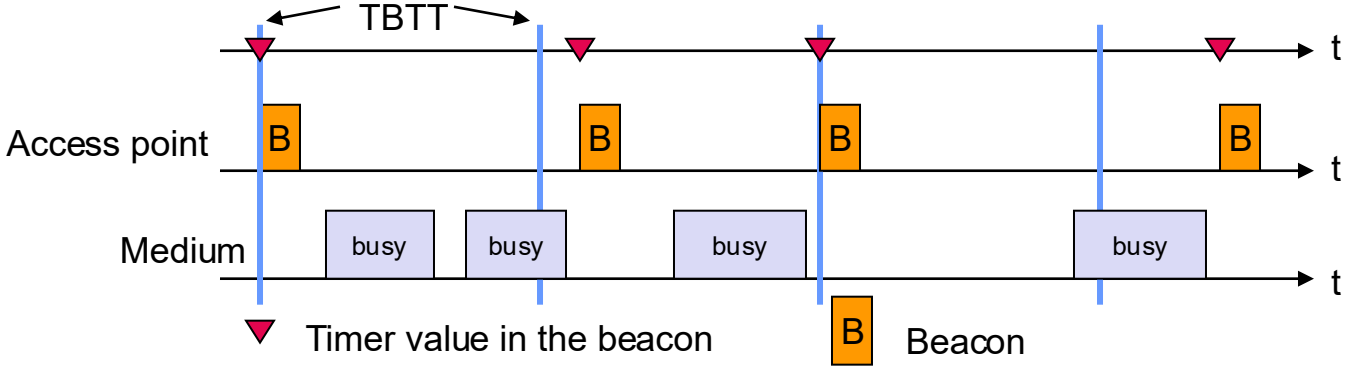

Time synchronization in ad-hoc networks

- Distributed approach
  - After the TBTT expires, each station determines a random delay
  - Station sends beacon if no beacon has been received after the random delay expires
  - Timer is only updated if timer value in the beacon was greater than your own value
    - Synchronization to the fastest running clock

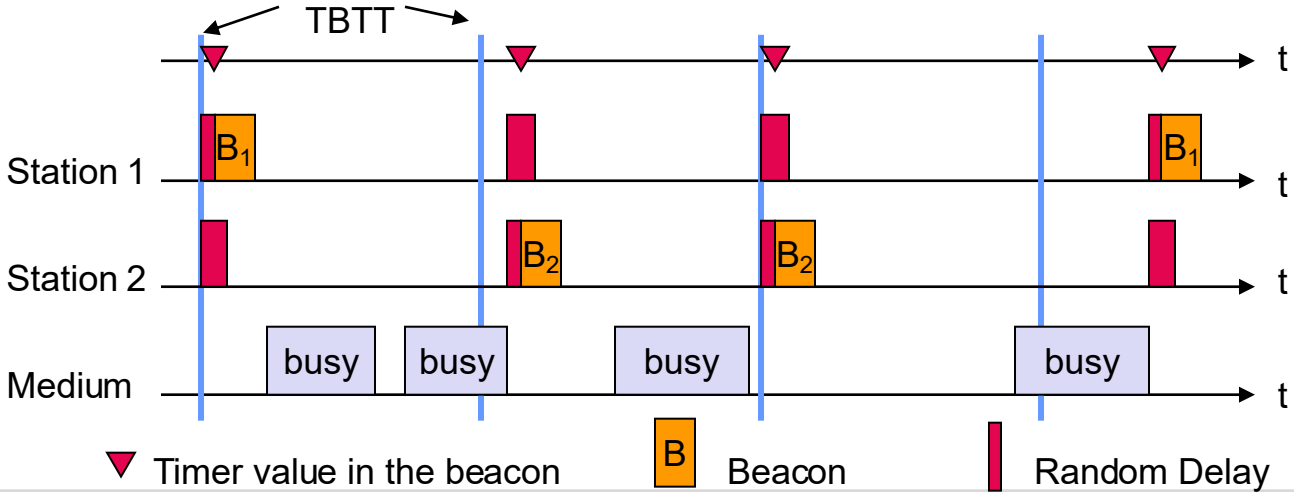

Power-Management (1)

- Operating modes in IEEE 802.11
  - Active Mode (AM)
    - Transmitting/receiving unit active
    - Data can be sent and received
  - Power Save (PS)
    - Transmitting/receiving unit turned off
      - Unable to receive or send data
    - Transmitter signals transition to PS mode via the power management field of a data unit

Power-Management (2)

- Goal: Low energy consumption

- Basic procedure
  - Stations are in PS mode most of the time
  - Caching of Data Units
    - Infrastructure Network: Access Point
    - Ad-hoc network: all stations must be able to store temporarily
  - Stations switch to AM mode at fixed times
  - Stations retrieve cached data units
  - Station switches back to PS mode

Power Management in Infrastructure Networks

- Access point responsible for caching of data units
  - Acceptance: has a power supply and therefore always active
- Traffic Indication Map (TIM)
  - Disclosure of cached data units (AIDs)- Can be contained in a beacon
- Delivery TIM Interval (DTIM-Interval)
  - Interval for cached broadcast/multicast data units - Equivalent to three beacon intervals
  - Are only sent once to all stations
- Retrieving cached data units with Power Save Poll (PS-Poll)

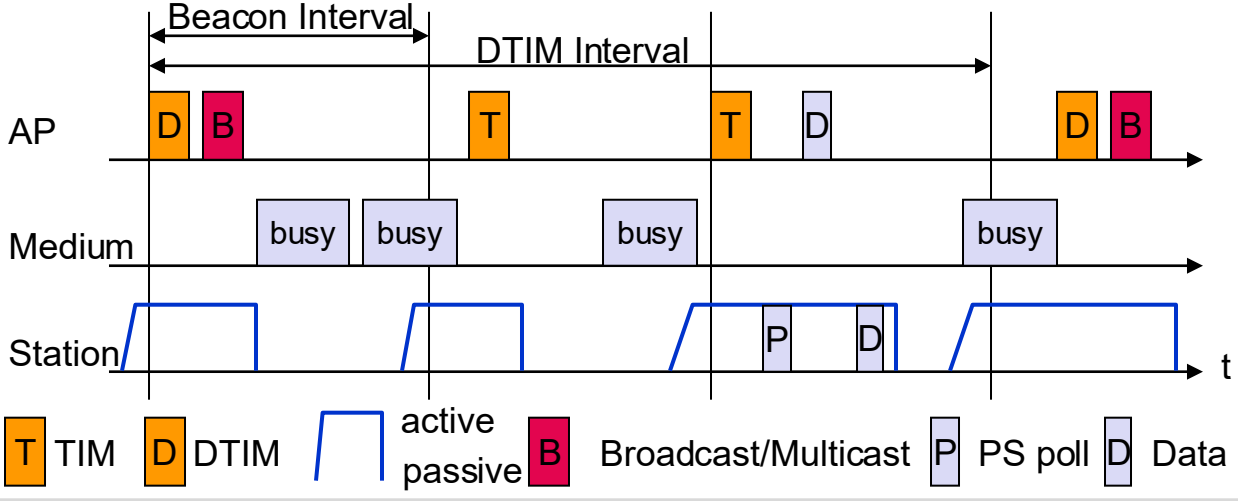

Power-Management in Ad-Hoc Networks

- Ad-hoc Traffic Indication Message (ATIM)
  - ATIM Window
    - During this period, all stations can receive data
    - Only beacons or ATIMs can be sent
    - Collisions of ATIMs possible (scalability?)
  - Announcement of receivers by the sending station

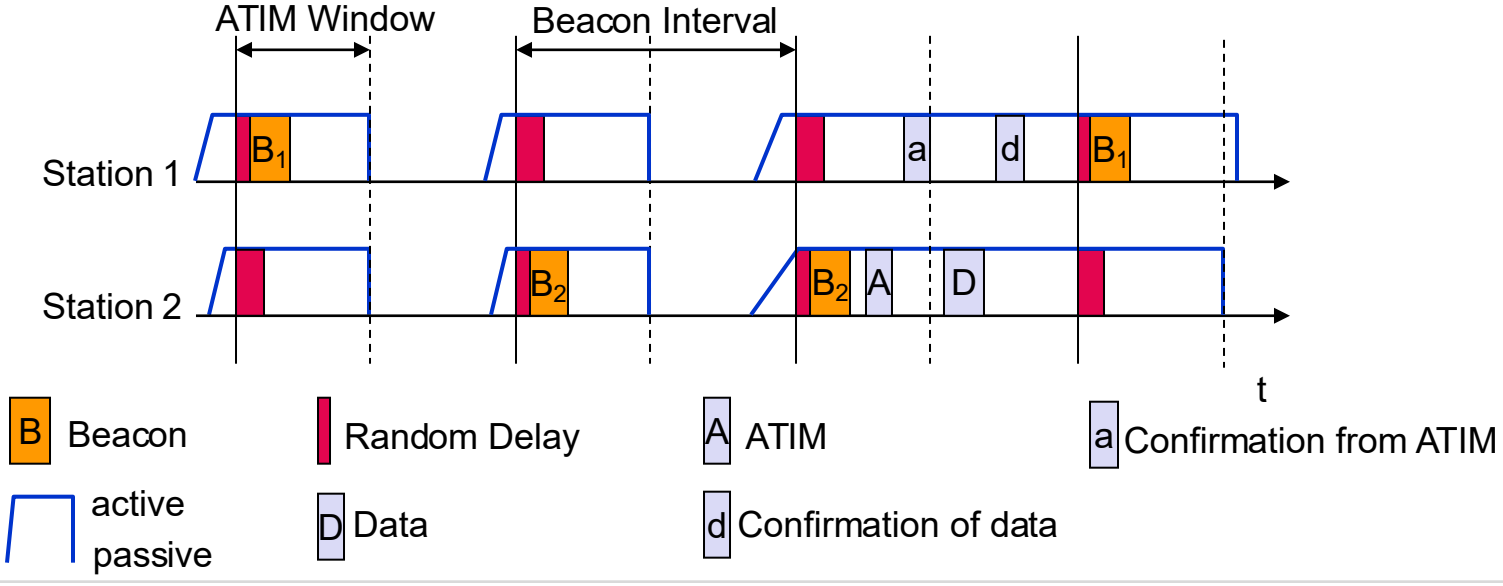

Quality of Service Support

Quality of Service (QoS)

- Goal: Provision of QoS capabilities for time-sensitive data (e.g. VoIP)
  - QBSS = radio cell that provides QoS

- Introduction of two new medium access methods
  - Enhanced Distributed Coordination Function (EDCF)
    - Basic Access Procedure in QBSS (replaces DCF)
    - Only possible in CP (Contention Period)
  - Hybrid Coordination Function (HCF)
    - Centralized management of the QBSS
    - Hybrid Coordinator (HC) controls media access (replaces PCF)
    - Possible in both CP and CFP

- Block Acknowledgement Mechanism
  - Station can transmit up to 64 data units at a distance from SIFS
  - After the last unit of data, the station sends a block ACK request
  - Receiver responds with Block-ACK response

Enhanced Distributed Coordination Function (EDCF)

- Prioritization of data through 8 different Traffic Categories (TC)
- Higher priority results in less waiting time for media access
  - Arbitration Interframe Space (AIFS)
    - Depending on TC used
  - Independent backoff algorithm for each TC
    - Different value ranges for the contention window (CW)
  - Internal Scheduler
    - In the event of virtual collisions, data units from TC with higher priority are given preferential treatment

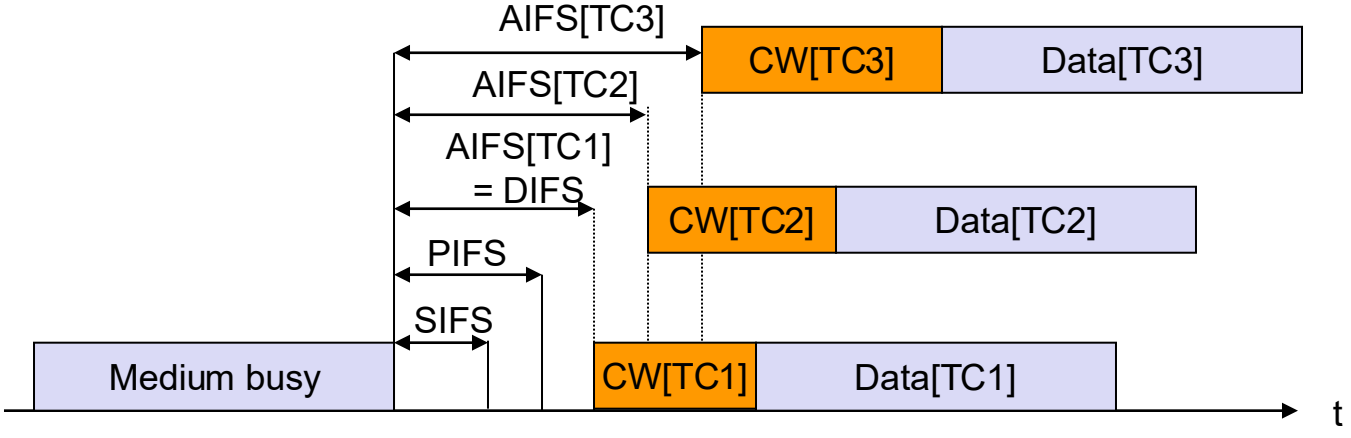

Hybrid Coordination Function (HCF)

- Transmission Opportunity (TXOP)
  - Time interval reserved for a certain traffic category
  - Station tells Hybrid Coordinator (HC) which stations need TXOPs
  - HC initiates CFP via QoS-Poll for certain TXOP

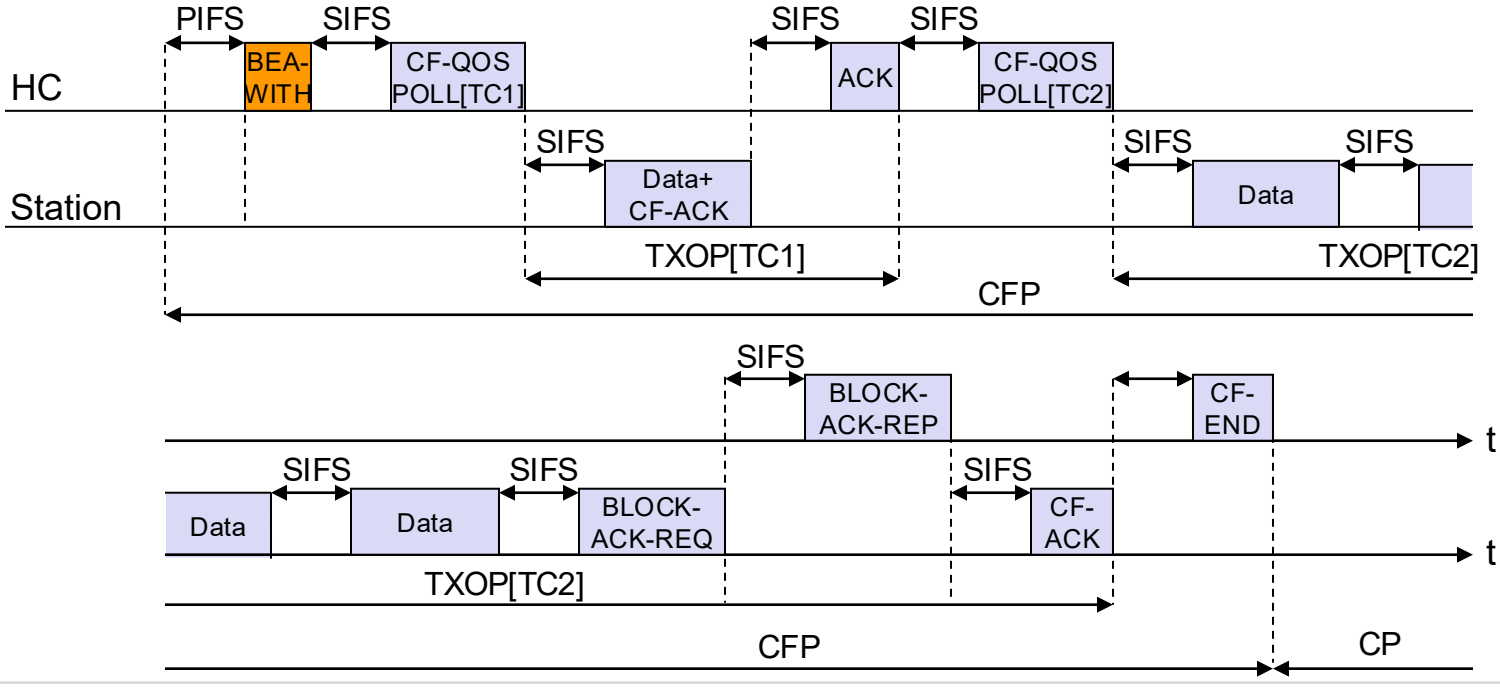

Summary (1)

- WLAN (802.11) has established itself as a wireless local area network
  - Can be operated in both infrastructure mode and ad-hoc mode

- Physical Layer (PHY)
  - Use of DSSS in the basic standard
  - Use of OFDM in newer solutions with higher data rates
  - Variants for 2.4 GHz, 5 GHz and 6 GHz bands
  - Data units contain information about the desired data rate
    - Start is always sent with the slowest variant
    - Backward compatibility
    - Length indication in the form of a time specification

Summary (2)

- Medium Access Control (MAC)
  - CSMA/CA procedure
    - CSMA/CD not applicable
      (hidden terminals, simultaneous sending and receiving...)
  - Two types of access
    - Distribution Coordination Function (dezentral)
    - Point Coordination Function (zentral)
  - ARQ procedures, fragmentation and security mechanisms in the MAC layer
  - MAC Data Units
    - More complex than e.g. Ethernet
    - Variable head length, time, multiple addresses
    - Frame control field with additional information

- MAC-Management
  - Synchronization
  - Security (e.g. authentication)
  - Scanning
  - Association/Re-Association
  - Power-Management

Exercises – WLAN networks

5.1 What are the basic forms of organization for wireless local area networks?
5.1 What modulation methods are used in 802.11 DSSS?
5.2 What methods are used to achieve different data rates in 802.11b?
5.3 What problems arise in wireless LANs that we generally do not have in wired LANs?
5.4 What are the different media access methods specified in 802.11?
5.5 What is the specific function of the Network Allocation Vector (NAV)?
5.6 How are sending priorities implemented in CSMA/CA?
5.7 How is quality of service ensured in WLAN networks?

References and further reading

[5.1] J. Rech, Wireless LAN – 802.11 WLAN Technologies and Practical Implementation in Detail, Verlag Heinz Heise, 2004

[5.2] B. O'Hara, A. Petrick, The IEEE 802.11 Handbook – A Designers Companion IEEE, 1999

[5.3] J. Schiller, Mobile Communication; Addison-Wesley, 2003 (Chapter 7)

[5.4] A. Chandra, V. Gummalla, J. Limb, Wireless Medium Access Control Protocols, IEEE Communications Surveys & Tutorials, www.comsoc.org/livepubs/surveys/public/2q00issue/gummalla.html, 6/2000

[5.5] I. Stojmenovic, ed., Handbook of Wireless Networks and Mobile Computing – Kapitel 6: Wireless Media Access Control, John Wiley & Sons, February 2002

[5.6] https://www.ka-wlan.de/info.html

[5.7] C.-K. Toh, Ad Hoc Mobile Wireless Networks: Protocols and Systems, Prentice Hall, 2002

[5.8] C. Perkins, Ad-hoc Networking, Addison Wesley, 2000

[5.9] IETF MANET Working Group http://www.ietf.org/html.charters/manet-charter.html

[5.10] The MANET Bibliography http://www.antd.nist.gov/wctg/manet/manet_bibliog.html

[5.11] http://nostringsattachedshow.com/2012/01/06/dsss-with-802-11-prime-and-802-11b/

[5.12] Ernst Ahlers: Funk-Evolution. In: c't. No. 13, 2009, pp. 86-89.

[5.13] http://www.dell.com/downloads/global/shared/broadcom_802_11_g.pdf